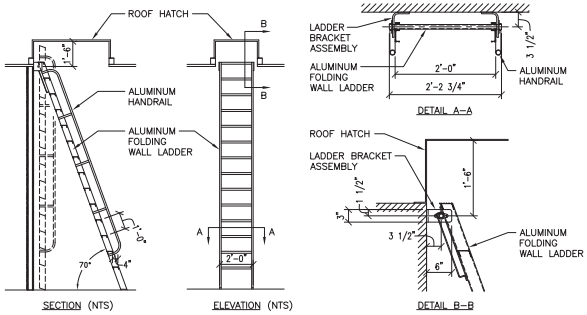

1 DETAIL @ LADDER

SCALE: N.T.S.

3 A-14c

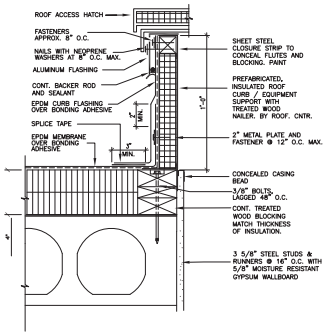

1 ROOF HATCH

SCALE: N.T.S.

2 A-14c

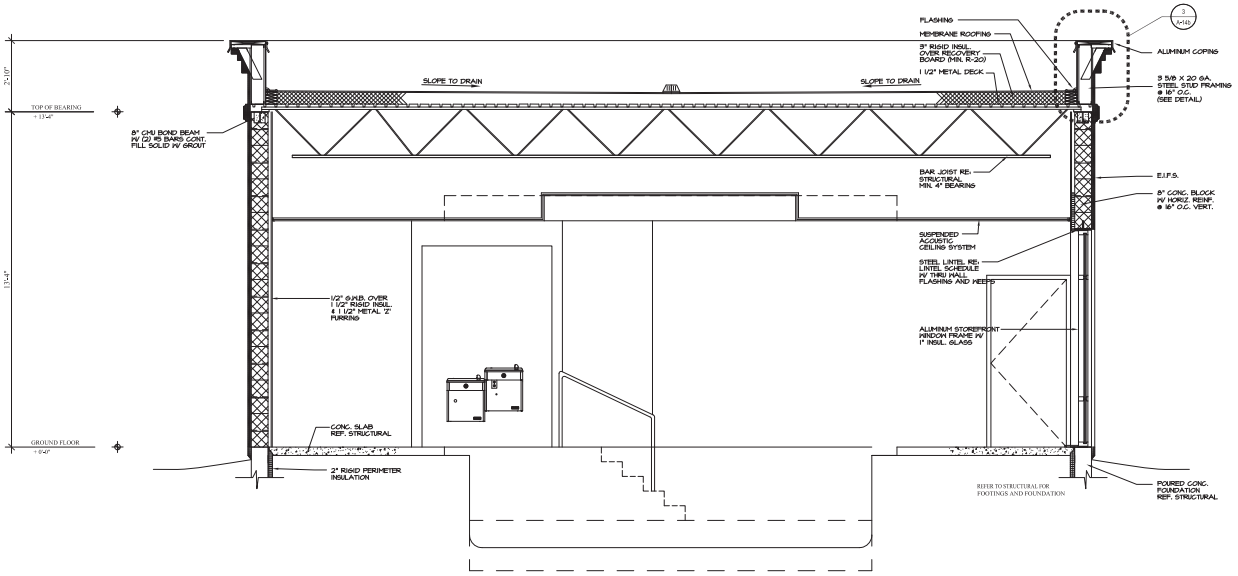

SECTION - POOL

SCALE: 1/2"=1'-0"

1 A-14c

REVISIONS

△ 11/21/2011 SCG

PH- (716)667-1436
FAX- (716)667-0163
dmarchtecs@aol.com

POOL SECTION & ROOF ACCESS DETAILS

NEW HAMPTON INN for:

INDUS DEVELOPMENT
4873 LAKE ROAD
SWEDEN, NEW YORK

DATE: 9/29/2011
SCALE: AS NOTED
DRAWN: DKM
CHECKED: DKM

A-14c

SHEET NUMBER